320W Constant Voltage + Constant Current LED Driver HLG-320H series

User's Manual

TAIWAN EXCELLENCE 2011

(except for AB,C-type) (except for C-type) Type HL IS 15885 (NOTE 13) SELV IP65 IP67

Features

- Constant Voltage + Constant Current mode output
- Metal housing with class Ⅰ design
- Built-in active PFC function
- IP67 / IP65 rating for indoor or outdoor installations
- Function options: output adjustable via potentiometer; 3 in 1 dimming
- Typical lifetime > 62000 hours
- 7 years warranty

Applications

- LED street lighting
- LED high-bay lighting
- Parking space lighting
- LED fishing lamp
- LED greenhouse lighting
- Type "HL" for use in Class Ⅰ, Division 2 hazardous (Classified) location.

GTIN CODE

MW Search: https://www.meanwell.com/serviceGTIN.aspx

Description

HLG-320H series is a 320W AC/DC LED driver featuring the dual mode constant voltage and constant current output. HLG-320H operates from 90~305VAC and offers models with different rated voltage ranging between 12V and 54V. Thanks to the high efficiency up to 94%, with the fanless design, the entire series is able to operate for -40℃ ~ +90℃ case temperature under free air convection. The design of metal housing and IP67/IP65 ingress protection level allows this series to fit both indoor and outdoor applications. HLG-320H is equipped with various function options, such as dimming methodologies, so as to provide the optimal design flexibility for LED lighting system.

Model Encoding

HLG - 320H - 15 A

- A — Function options
- 15 — Rated output voltage (12V/15V/20V/24V/30V/36V/42V/48V/54V)
- 320H — Rated wattage
- HLG — Series name

Type	IP Level	Function	Note
Blank	IP67	Io and Vo fixed	In Stock
A	IP65	Io and Vo adjustable through built-in potentiometer	In Stock
B	IP67	3 in 1 dimming function (1~10VDC, 10V PWM signal and resistance)	In Stock
AB	IP65	Io adjustable through built-in potentiometer & 3 in 1 dimming function (1~10Vdc, 10V PWM signal and resistance)	In Stock
C	------	Terminal block for I/O connection. Output voltage and constant current level can be adjusted through internal potentiometer.	By request
D	IP67	Timer dimming function, contact MEAN WELL for details(safety pending).	By request

SPECIFICATION

MODEL		HLG-320H-12□	HLG-320H-15□	HLG-320H-20□	HLG-320H-24□	HLG-320H-30□	HLG-320H-36□	HLG-320H-42□	HLG-320H-48□	HLG-320H-54□
OUTPUT	DC VOLTAGE	12V	15V	20V	24V	30V	36V	42V	48V	54V
	CONSTANT CURRENT REGION Note.4	6 ~12V	7.5 ~ 15V	10 ~ 20V	12 ~ 24V	15 ~ 30V	18 ~ 36V	21 ~ 42V	24 ~ 48V	27 ~ 54V
	RATED CURRENT	22A	19A	15A	13.34A	10.7A	8.9A	7.65A	6.7A	5.95A
	RATED POWER	264W	285W	300W	320.16W	321W	320.4W	321.3W	321.6W	321.3W
	RIPPLE & NOISE (max.) Note.2	150mVp-p	150mVp-p	150mVp-p	150mVp-p	200mVp-p	250mVp-p	250mVp-p	250mVp-p	350mVp-p
	VOLTAGE ADJ. RANGE	Adjustable for A/C-Type only (via built-in potentiometer)								
		10.8 ~ 13.5V	13.5 ~ 17V	17 ~ 22V	21 ~ 26V	26 ~ 32V	32 ~ 39V	38 ~ 45V	43 ~ 52V	49 ~ 58V
	CURRENT ADJ. RANGE	Adjustable for A/AB/C-Type only (via built-in potentiometer)								
		11 ~ 22A	9.5 ~ 19A	7.5 ~ 15A	6.67 ~ 13.34A	5.35 ~ 10.7A	4.45 ~ 8.9A	3.8 ~ 7.65A	3.35 ~ 6.7A	2.97 ~ 5.95A
	VOLTAGE TOLERANCE Note.3	±3.0%	±2.0%	±1.5%	±1.0%	±1.0%	±1.0%	±1.0%	±1.0%	±1.0%
	LINE REGULATION	±0.5%	±0.5%	±0.5%	±0.5%	±0.5%	±0.5%	±0.5%	±0.5%	±0.5%
	LOAD REGULATION	±2.0%	±1.5%	±1.0%	±0.5%	±0.5%	±0.5%	±0.5%	±0.5%	±0.5%
	SETUP, RISE TIME Note.6	2500ms,80ms/115VAC 600ms,80ms/230VAC								
	HOLD UP TIME (Typ.)	15ms / 115VAC, 230VAC								
INPUT	VOLTAGE RANGE Note.5	90 ~ 305VAC 127 ~ 431VDC (Please refer to "STATIC CHARACTERISTIC" section)								
	FREQUENCY RANGE	47 ~ 63Hz								
	POWER FACTOR (Typ.)	PF≧0.98/115VAC, PF≧0.95/230VAC, PF≧0.94/277VAC @ full load (Please refer to "POWER FACTOR (PF) CHARACTERISTIC" section)								
	TOTAL HARMONIC DISTORTION	THD< 20% (@ load≧50% / 115VAC,230VAC; @ load≧75% / 277VAC) (Please refer to "TOTAL HARMONIC DISTORTION (THD)" section)								
	EFFICIENCY (Typ.) (230Vac)	91%	92.5%	93.5%	94%	94%	94.5%	95%	95%	95%
	EFFICIENCY (Typ.) (277Vac)	91.5%	93%	94%	94.5%	94.5%	95%	95%	95%	95%
	AC CURRENT (Typ.)	3.5A / 115VAC 1.65A / 230VAC 1.45A / 277VAC								
	INRUSH CURRENT(Typ.)	COLD START 70A(t_{width}=1010μs measured at 50% I_{peak}) at 230VAC; Per NEMA 410								
	MAX. No. of PSUs on 16A CIRCUIT BREAKER	1 unit (circuit breaker of type B) / 2 units (circuit breaker of type C) at 230VAC								
	LEAKAGE CURRENT	<0.75mA / 277VAC								
PROTECTION	OVER CURRENT Note.4	95 ~ 108%								
		Constant current limiting, recovers automatically after fault condition is removed								
	SHORT CIRCUIT	Hiccup mode, recovers automatically after fault condition is removed								
	OVER VOLTAGE	14 ~ 17V	17.5 ~ 21V	22.5 ~ 27V	27 ~ 33V	33 ~ 37V	40 ~ 46V	46.5 ~ 53V	53.5 ~ 60V	59 ~ 65V
		Shut down and latch off o/p voltage, re-power on to recover								
	OVER TEMPERATURE	Shut down and latch off o/p voltage, re-power on to recover								
ENVIRONMENT	WORKING TEMP.	Tcase= -40 ~ +90℃ (Please refer to "OUTPUT LOAD vs TEMPERATURE" section)								
	MAX. CASE TEMP.	Tcase= +90℃								
	WORKING HUMIDITY	20 ~ 95% RH non-condensing								
	STORAGE TEMP., HUMIDITY	-40 ~ +80℃, 10 ~ 95% RH								
	TEMP. COEFFICIENT	±0.03%/℃ (0 ~ 50℃)								
	VIBRATION	10 ~ 500Hz, 5G 12min./1cycle, period for 72min. each along X, Y, Z axes								
SAFETY & EMC	SAFETY STANDARDS	UL8750(type"HL"), CSA C22.2 No. 250.0-08; BS EN/EN/AS/NZS 61347-1, BS EN/EN/AS/NZS 61347-2-13 independent; GB19510.1,GB19510.14; IP65 or IP67 (except for HLG-320H C-type); J61347-1, J61347-2-13 (except for C-type), EAC TP TC 004;KC61347-1,KC61347-2-13(except for AB,C-type), BIS IS 15885(Part2/Sec13) (NOTE 13) approved								
	WITHSTAND VOLTAGE	I/P-O/P:3.75KVAC I/P-FG:2KVAC O/P-FG:1.5KVAC								
	ISOLATION RESISTANCE	I/P-O/P, I/P-FG, O/P-FG:100M Ohms / 500VDC / 25℃/ 70% RH								
	EMC EMISSION	Compliance to BS EN/EN55015, BS EN/EN55032 (CISPR32) Class B, BS EN/EN61000-3-2 Class C (@ load≧50%) ; BS EN/EN61000-3-3,GB/T 17743 , GB17625.1,EAC TP TC 020								
	EMC IMMUNITY	Compliance to BS EN/EN61000-4-2,3,4,5,6,8,11, BS EN/EN61547, BS EN/EN55024, light industry level (surge immunity Line-Earth 4KV, Line-Line 2KV), EAC TP TC 020								
OTHERS	MTBF	1702.2K hrs min. Telcordia SR-332 (Bellcore) ; 157.2K hrs min. MIL-HDBK-217F (25℃)								
	DIMENSION	252*90*43.8mm (L*W*H)								
	PACKING	1.88Kg; 8pcs/16Kg/0.92CUFT								

NOTE

1. All parameters NOT specially mentioned are measured at 230VAC input, rated current and 25℃ of ambient temperature.
2. Ripple & noise are measured at 20MHz of bandwidth by using a 12" twisted pair-wire terminated with a 0.1uf & 47uf parallel capacitor.
3. Tolerance : includes set up tolerance, line regulation and load regulation.
4. Please refer to "DRIVING METHODS OF LED MODULE".
5. De-rating may be needed under low input voltages. Please refer to "STATIC CHARACTERISTIC" sections for details.
6. Length of set up time is measured at first cold start. Turning ON/OFF the driver may lead to increase of the set up time.
7. The driver is considered as a component that will be operated in combination with final equipment. Since EMC performance will be affected by the complete installation, the final equipment manufacturers must re-qualify EMC Directive on the complete installation again. (as available on https://www.meanwell.com//Upload/PDF/EMI_statement_en.pdf)
8. To fulfill requirements of the latest ErP regulation for lighting fixtures, this LED driver can only be used behind a switch without permanently connected to the mains.
9. This series meets the typical life expectancy of >62,000 hours of operation when Tcase, particularly (tc) point (or TMP, per DLC), is about 75℃ or less.
10. Please refer to the warranty statement on MEAN WELL's website at http://www.meanwell.com.
11. The ambient temperature derating of 3.5℃/1000m with fanless models and of 5℃/1000m with fan models for operating altitude higher than 2000m(6500ft).
12. For any application note and IP water proof function installation caution, please refer our user manual before using. https://www.meanwell.com/Upload/PDF/LED_EN.pdf
13. BIS certification is for HLG-320H-A only, but products sourced from Taiwan do not have the BIS logo, please contact your MEAN WELL sales for more information.
14. For A/AB type need to consider build in using to comply with Type HL application.

※ Product Liability Disclaimer : For detailed information, please refer to https://www.meanwell.com/serviceDisclaimer.aspx

■ BLOCK DIAGRAM

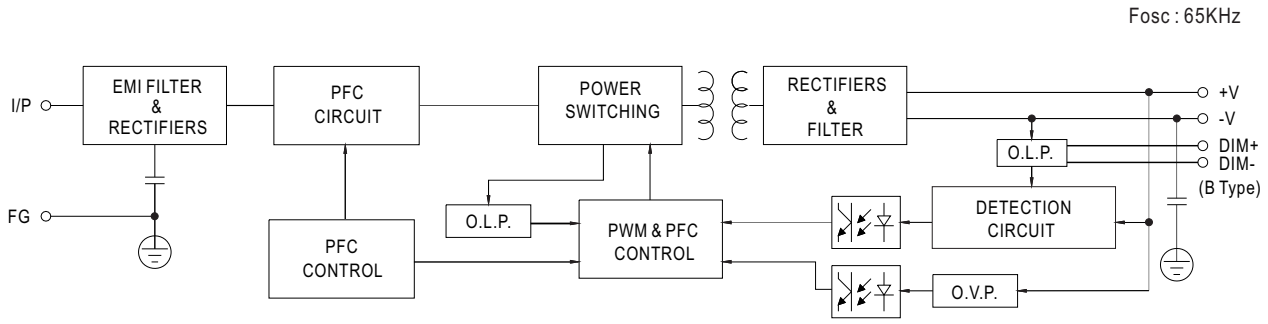

■ DRIVING METHODS OF LED MODULE

※ This series is able to work in either Constant Current mode (a direct drive way) or Constant Voltage mode (usually through additional DC/DC driver) to drive the LEDs.

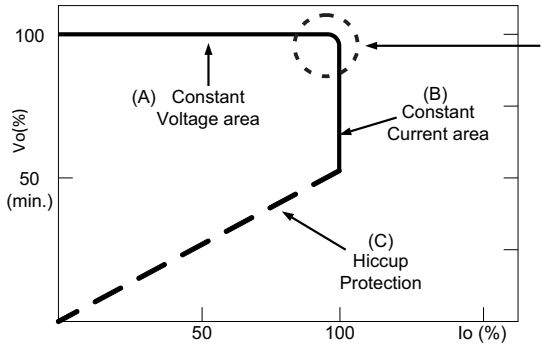

Typical output current normalized by rated current (%)

In the constant current region, the highest voltage at the output of the driver depends on the configuration of the end systems.

Should there be any compatibility issues, please contact MEAN WELL.

■ DIMMING OPERATION

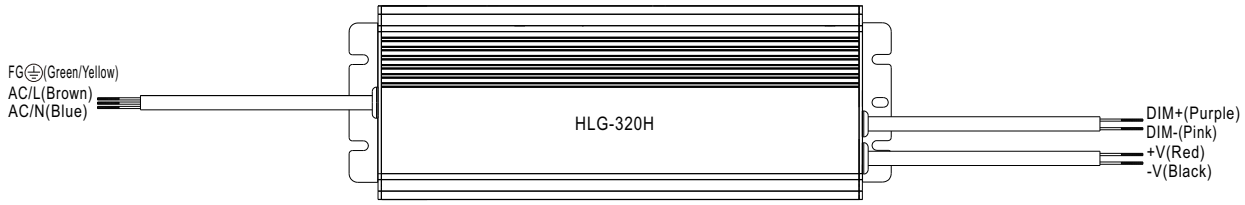

※ **3 in 1 dimming function (for B/AB-Type)**

- Output constant current level can be adjusted by applying one of the three methodologies between DIM+ and DIM-: 1 ~ 10VDC, or 10V PWM signal or resistance.
- Direct connecting to LEDs is suggested. It is not suitable to be used with additional drivers.
- Dimming source current from power supply: 100μA (typ.)

◎ Applying additive 1 ~ 10VDC

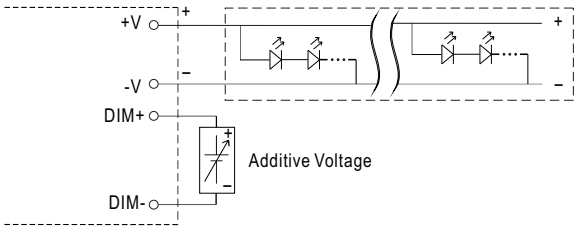

"DO NOT connect "DIM- to -V"

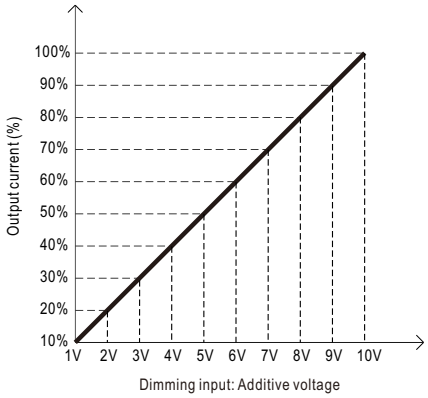

◎ Applying additive 10V PWM signal (frequency range 100Hz ~ 3KHz):

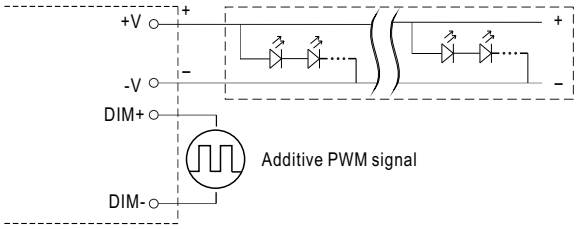

"DO NOT connect "DIM- to -V"

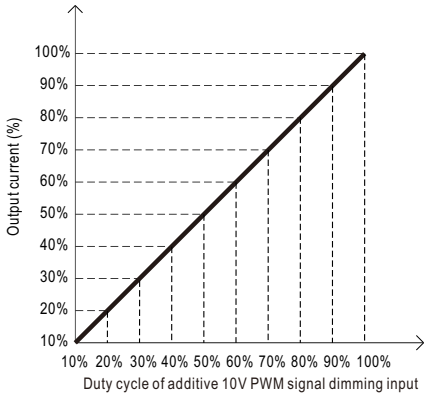

◎ Applying additive resistance:

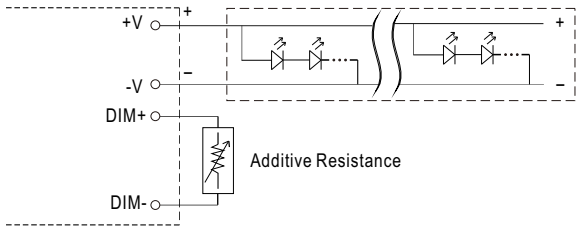

"DO NOT connect "DIM- to -V"

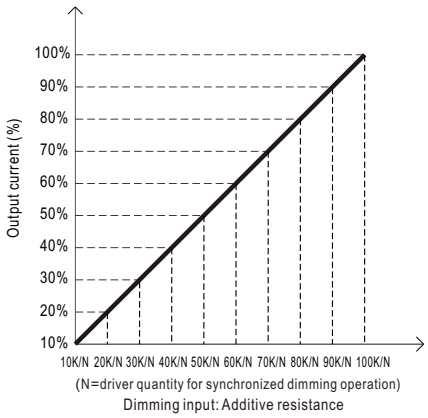

Note: In the case of turning the lighting fixture down to 0% brightness, please refer to the configuration as follow, or please contact MEAN WELL for other options.

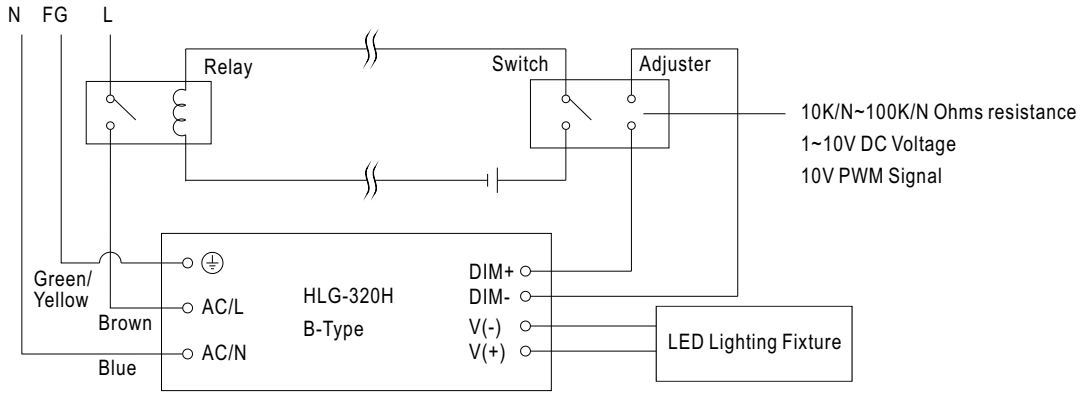

Using a switch and relay can turn ON/OFF the lighting fixture.

■ OUTPUT LOAD vs TEMPERATURE(Note.10)

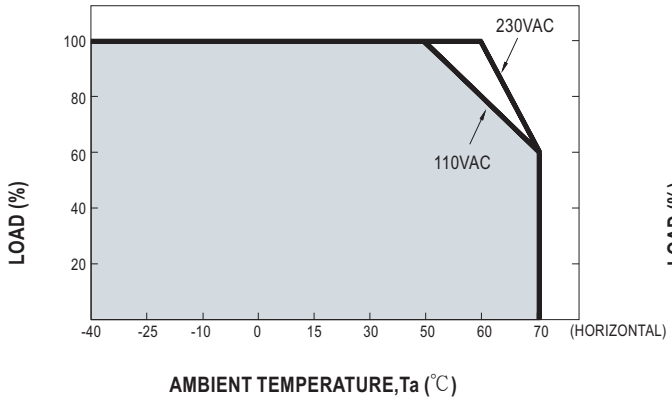

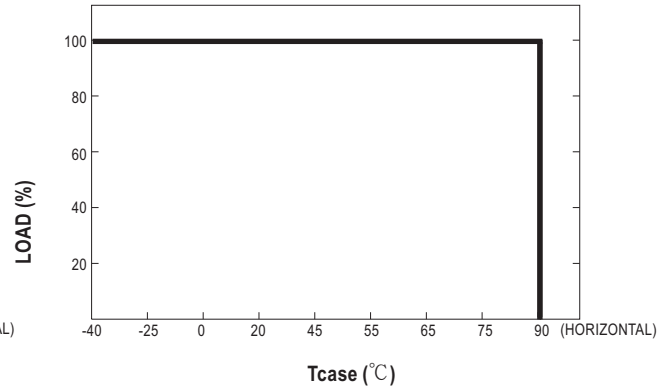

■ STATIC CHARACTERISTICS

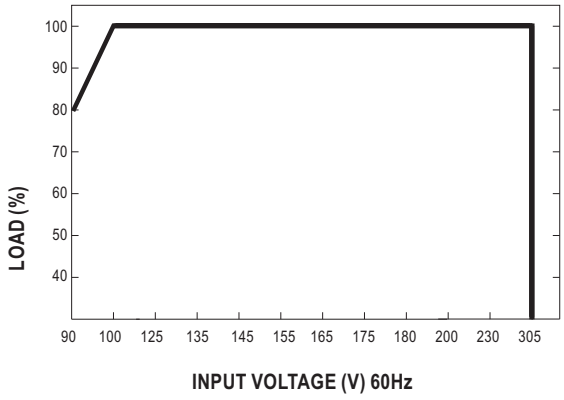

※ De-rating is needed under low input voltage.

■ POWER FACTOR(PF) CHARACTERISTIC

※Tcase at 80℃

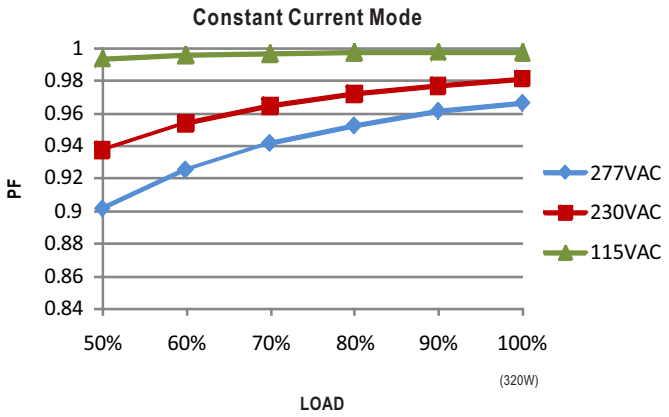

■ TOTAL HARMONIC DISTORTION (THD)

※ 48V Model, Tcase at 80℃

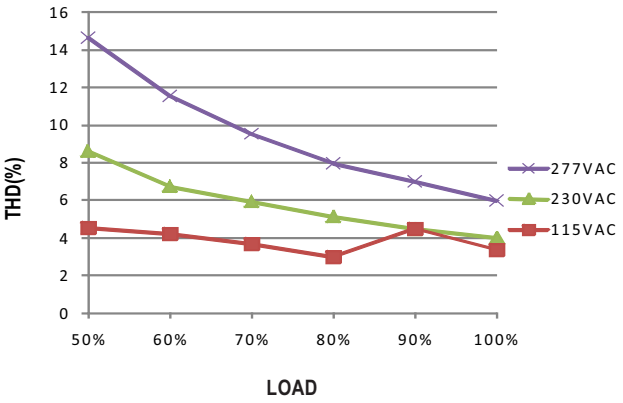

■ EFFICIENCY vs LOAD

HLG-320H series possess superior working efficiency that up to 95% can be reached in field applications.

※ 48V Model, Tcase at 80℃

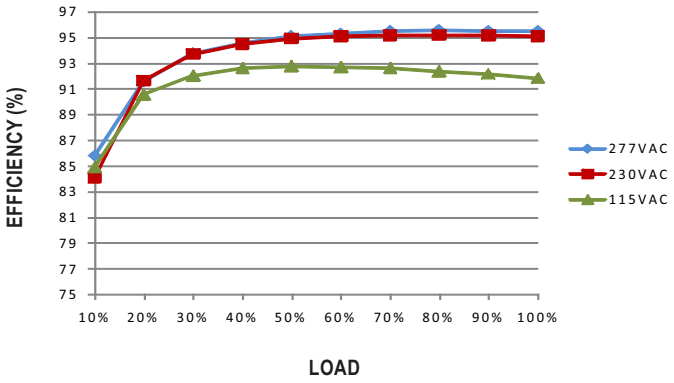

■ LIFE TIME

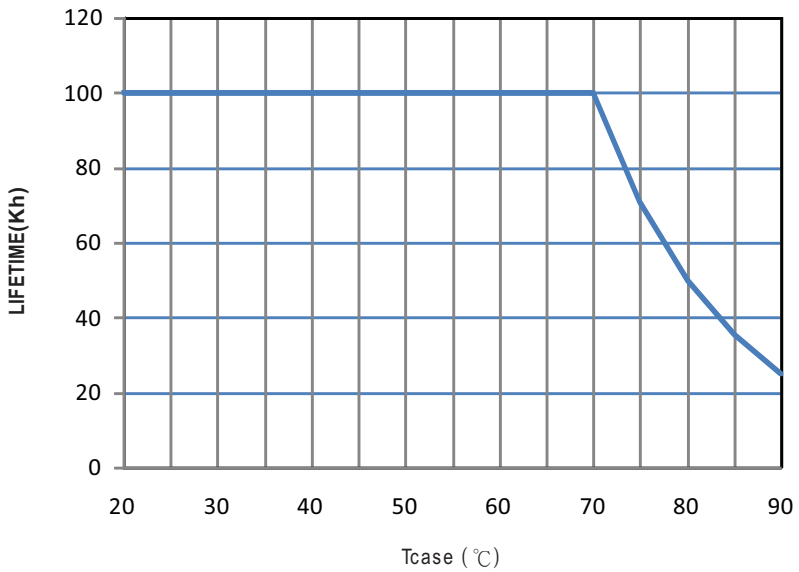

■ MECHANICAL SPECIFICATION

Case No.202A Unit:mm Tolerance:±1

※**Blank/D-Type**

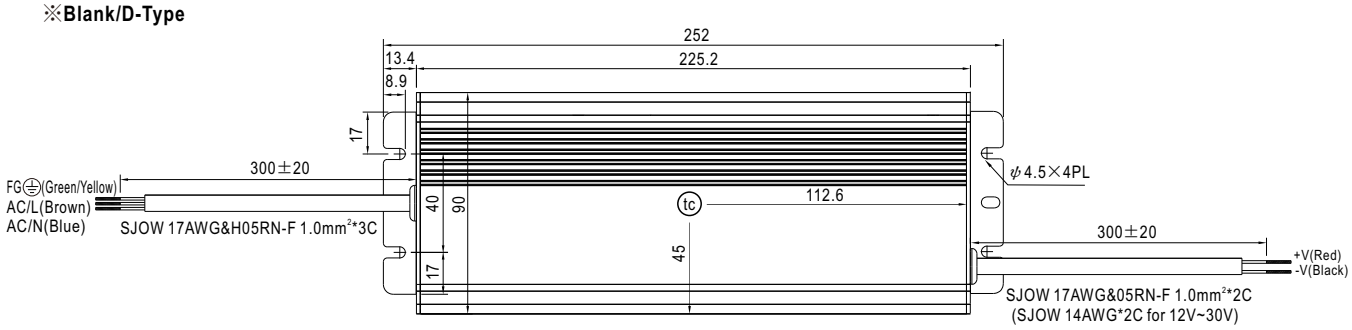

• tc : Max. Case Temperature

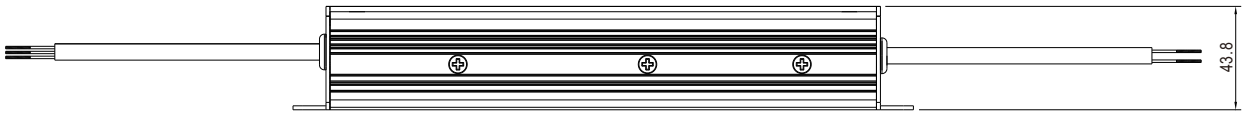

※**A-Type**

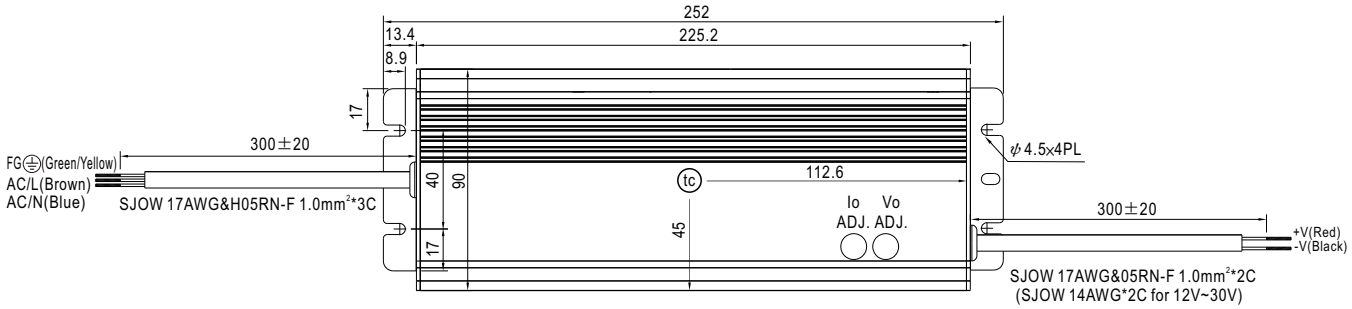

• tc : Max. Case Temperature

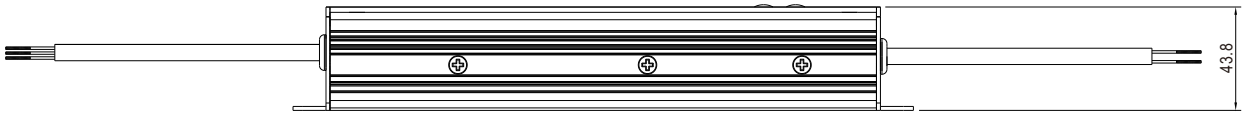

※**B-Type**

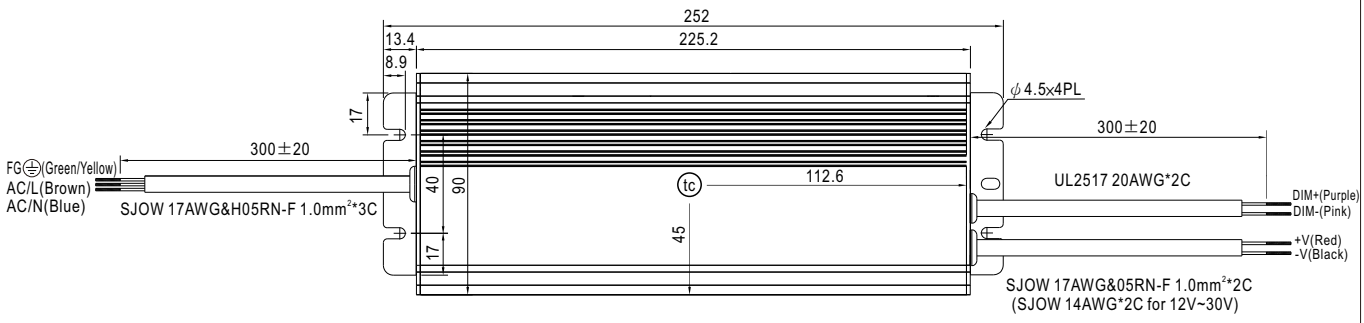

• tc : Max. Case Temperature

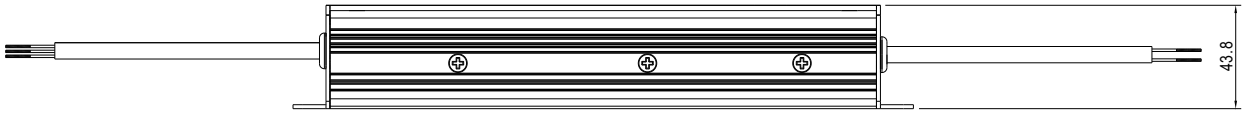

※**AB-Type**

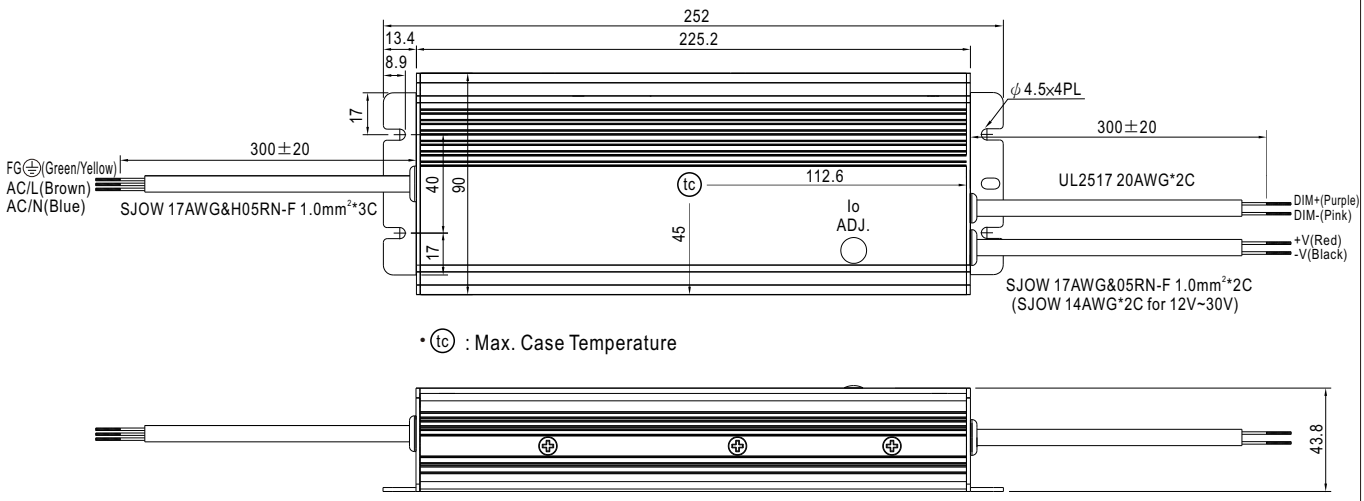

• tc : Max. Case Temperature

※**C-Type**

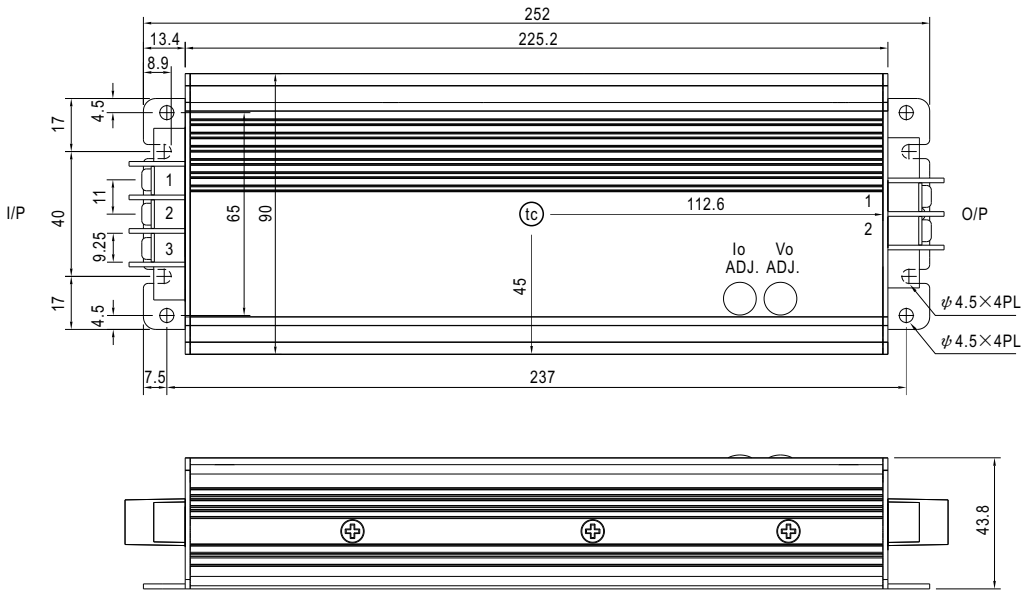

AC Input Terminal Pin No. Assignment

Pin No.	Assignment
1	FG ⏚
2	AC/L
3	AC/N

DC Output Terminal Pin No. Assignment

Pin No.	Assignment
1	+V
2	-V

■ WATERPROOF CONNECTION

※ **Waterproof connector**

Waterproof connector can be assembled on the output cable of HLG-320H to operate in dry/wet/damp or outdoor environment.

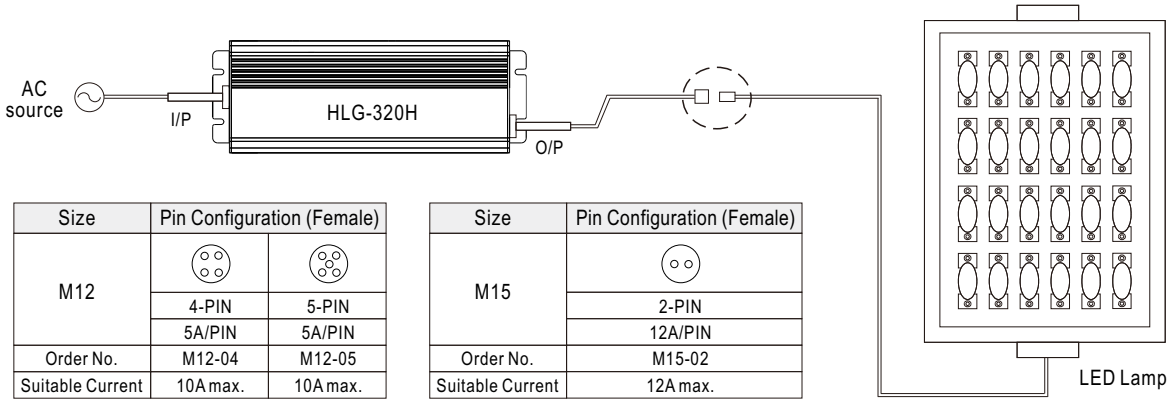

Size	Pin Configuration (Female)	
M12		
	4-PIN	5-PIN
	5A/PIN	5A/PIN
Order No.	M12-04	M12-05
Suitable Current	10A max.	10A max.

Size	Pin Configuration (Female)
M15	
	2-PIN
	12A/PIN
Order No.	M15-02
Suitable Current	12A max.

※ **Cable Joiner**

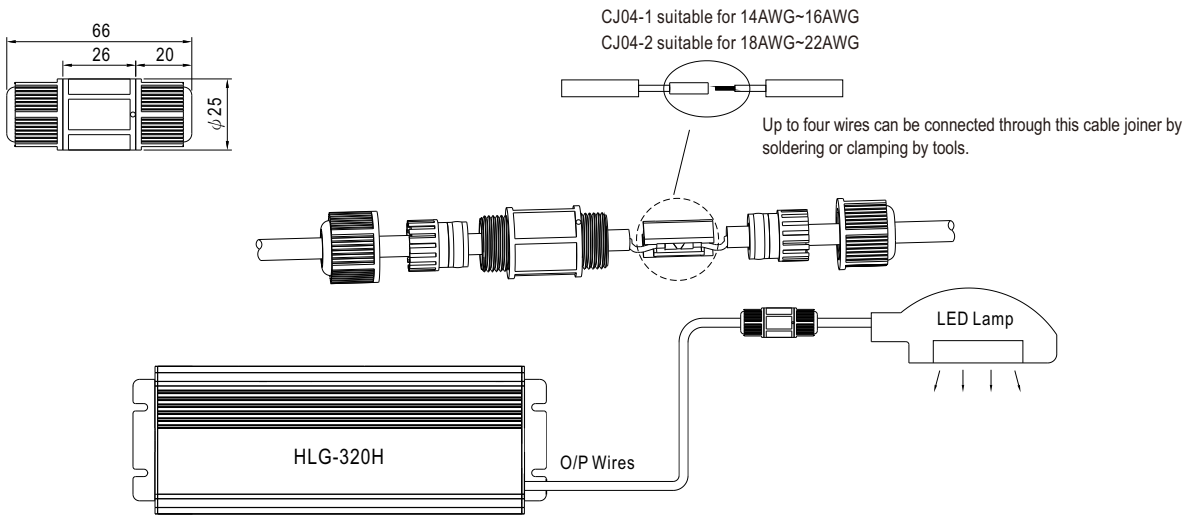

◎ CJ04 cable joiner can be purchased independently for user's own assembly.
MEAN WELL order No. : CJ04-1, CJ04-2.

※ **Junction Box Option**

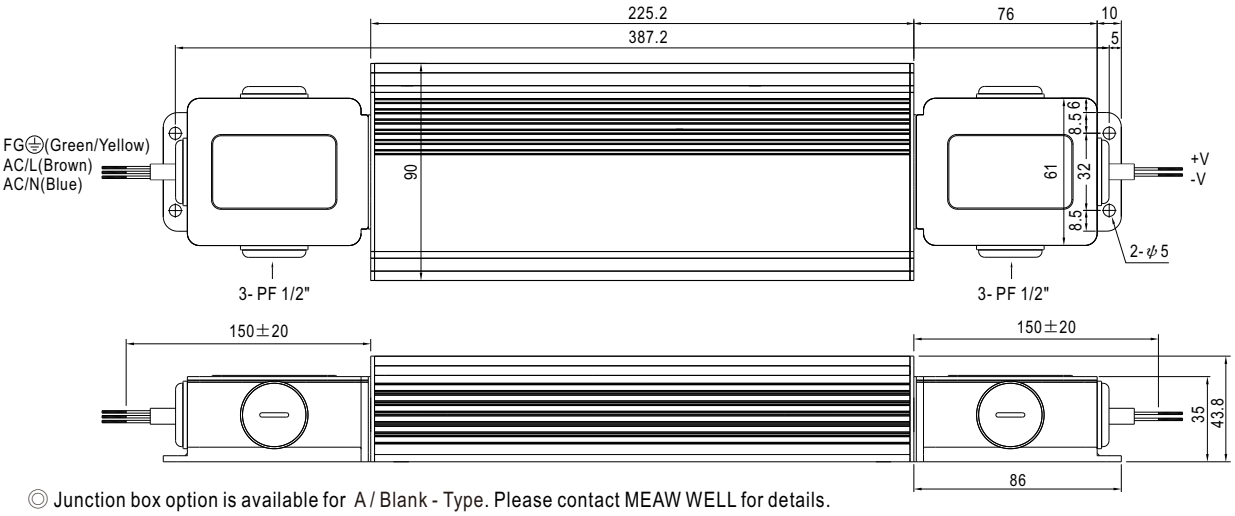

◎ Junction box option is available for A / Blank - Type. Please contact MEAW WELL for details.

■ INSTALLATION MANUAL

Please refer to : http://www.meanwell.com/manual.html